Masta®
PRECISION HOUSINGS

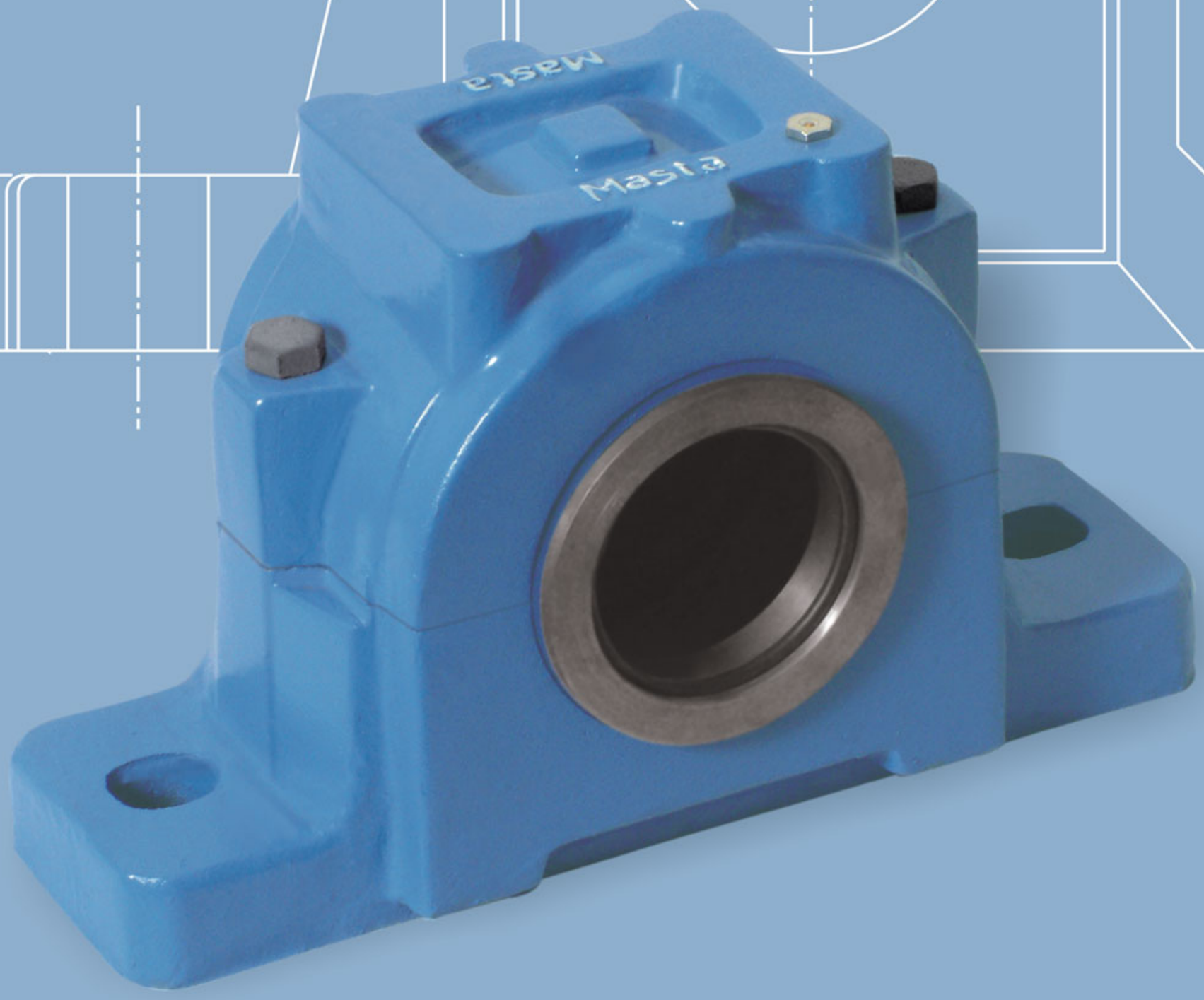

MNL Series

MNL Series

Equivalent to SNL Series Plummer Blocks

Masta®
PRECISION HOUSINGS

MNL 500 & 600 Series

Plummer Blocks (Bearing housings)
Series MNL 500 / 600 for bearings with adapter sleeves

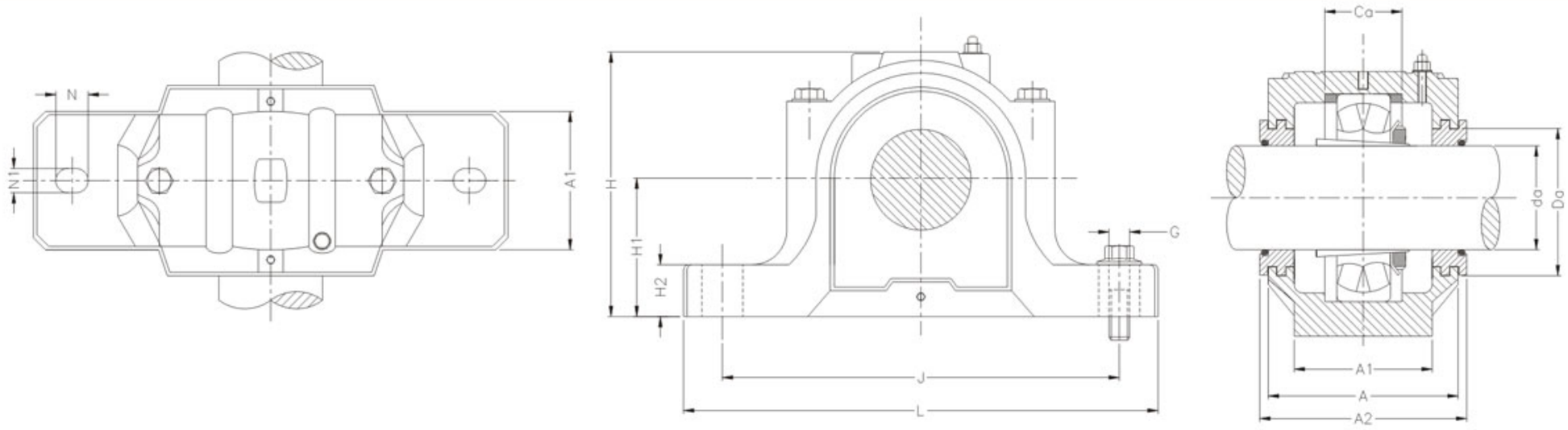

Plummer Block Designation	Shaft dia da mm	DIMENSION IN MM													Approx Weight kg.	Bearing with Adapter Sleeve	Locating Ring size / Two Nos. per Housing
		A	A1	A2	Da	H	H1	H2	J	L	Ca	N	N1	G			
MNL 505	20	67	46	80	31.5	74	40	19	130	165	25	20	15	12	1.5	1205 EK + H 205 2205 EK + H 305 22205 CCK + H 305	5/52 3.5/52 3.5/52
MNL 506	25	77	52	89	36.5	89	50	22	150	185	32	20	15	12	2.0	1206 EK + H 206 2206 EK + H 306 22206 EK + H 306	8/62 6/62 6/62
MNL 605	20															1305 EK + H 305 2305 EK + H 2305	7.5/62 4/62
MNL 507	30	82	52	94	46.5	93	50	22	150	185	34	20	15	12	2.2	1207 EK + H 207 2207 EK + H 307 22207 EK + H 307	8.5/72 5.5/72 5.5/72
MNL 606	25															1306 EK + H 306 2306 EK + H 306	7.5/72 3.5/72
MNL 508	35	85	60	97	51.5	107	60	25	170	205	39	20	15	12	3.0	1208 EK + H 208 2208 EK + H 308 22208 EK + H 308	10.5/80 8/80 8/80
MNL 607	30					108										1307 EK + H 307 2307 EK + H 2307	9/80 4/80
MNL 509	40	85	60	97	56.5	109	60	25	170	205	30	20	15	12	3.0	1209 EK + H 209 2209 EK + H 309 22209 CCK + H 309	5.5/85 3.5/85 3.5/85
MNL 510	45	90	60	102	62	113	60	25	170	205	41	20	15	12	3.3	1210 EK + H 210 2210 EK + H 310 22210 CCK + H 310	10.5/90 9/90 9/90
MNL 608	35															1308 EK + H 308 2308 EK + H 2308 21308 CCK + H 308 22308 CCK + H 2308	9/90 4/90 9/90 4/90
MNL 511	50	95	70	107	67	127	70	28	210	255	44	24	18	16	4.5	1211 EK + H 211 2211 EK + H 311 22211 EK + H 311	11.5/100 9.5/100 9.5/100
MNL 609	40					127										1309 EK + H 309 2309 EK + H 2309 21309 CCK + H 309 22309 CCK + H 2309	9.5/100 4/100 9.5/100 4/100

Plummer Blocks (Bearing housings) Series MNL 500 / 600 for bearings with adapter sleeves

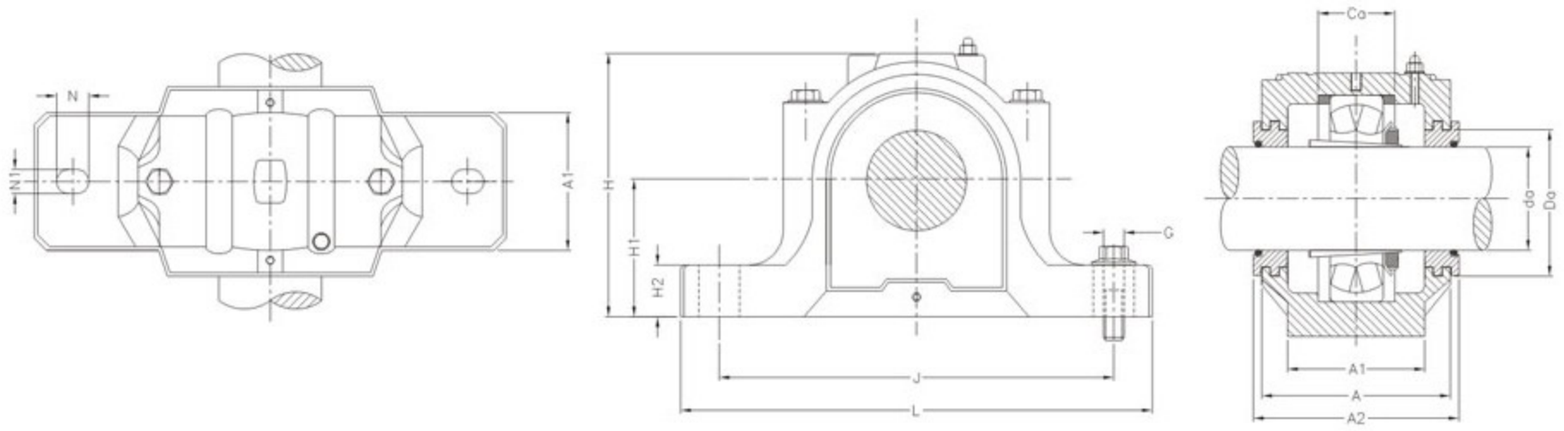

Plummer Block Designation	Shaft dia da mm	DIMENSION IN MM													Approx Weight kg.	Bearing with Adapter Sleeve	Locating Ring size / Two Nos. per Housing
		A	A1	A2	Da	H	H1	H2	J	L	Ca	N	N1	G			
MNL 512	55	105	70	117	72	134	70	30	210	255	48	24	18	16	5.3	1212 EK + H 212	13/110
																2212 EK + H 312	10/110
																22212 EK + H 312	10/110
MNL 610	45					133										1310 CCK + H 310	10.5/110
																2310 EK + H 2310	4/110
																21310 CCK +H 310	10.5/110
																22310 CCK + H 2310	4/110
MNL 513	60	110	80	122	77	149	80	30	230	275	51	24	18	16	6.5	1213 EK + H 213	14/120
																2213 EK + H 313	10/120
																22213 CCK + H 313	10/120
MNL 611	50					148										1311 EK + H 311	11/120
																2311 EK + H 2311	4/120
																21311 CCK + H 311	11/120
																22311 EK + H 2311	4/120
MNL 515	65	115	80	127	87	154	80	30	230	280	56	24	18	16	7.2	1215 EK + H 215	15.5/130
																2215 EK + H 315	12.5/130
																22215 EK+ H 315	12.5/130
MNL 612	55															1312 EK + H 312	12.5/130
																2312 EK + H 2312	5/130
																21312 CCK + H 312	12.5/130
																22312 EK + H 2312	5/130
MNL 516	70	120	90	138	92.5	177	95	32	260	315	58	28	22	20	9.5	1216 EK + H 216	16/140
																2216 EK + H 316	12.5/140
																22216 EK + H 316	12.5/140
MNL 613	60					175										1313 EK + H 313	12.5/140
																2313 EK + H 2313	5/140
																21313 CCK + H 313	12.5/140
																22313 EK + H 2313	5/140
MNL 517	75	125	90	143	97.5	183	95	32	260	320	61	28	22	20	10.2	1217 EK + H 217	16.5/150
																2217 EK + H 317	12.5/150
																22217 EK + H 317	12.5/150
MNL 518	80	140	100	158	102.5	194	100	35	290	345	65	28	22	20	12.7	1218 EK + H 218	17.5/160
																2218 EK + H 318	12.5/160
																22218 EK + H 318	12.5/160
																23218 CCK + H 2318	6.25/160
MNL 615	65					193										1315 EK + H 315	14/160
																2315 EK + H 2315	5/160
																21315 CCK + H 315	14/160
																22315 EK + H 2315	5/160

Masta®
PRECISION HOUSINGS

MNL 500 & 600 Series

Plummer Blocks (Bearing housings)
Series MNL 500 / 600 for bearings with adapter sleeves

Plummer Block MNL 524 / 620 and above are supplied with eye bolt on cap

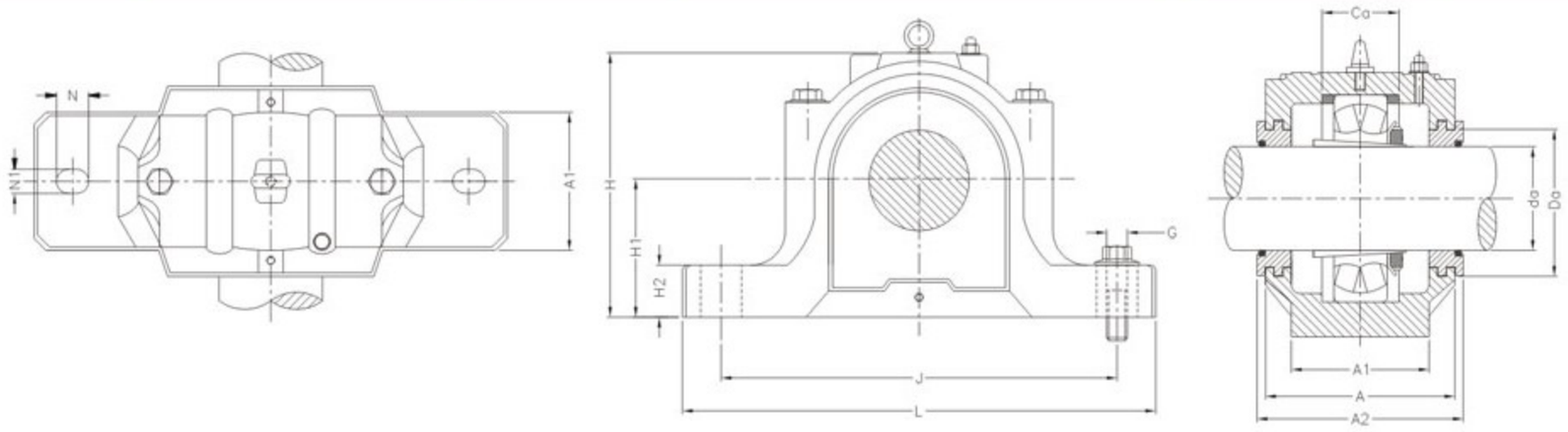

Plummer Block Designation	Shaft dia da mm	DIMENSION IN MM													Approx Weight kg.	Bearing with Adapter Sleeve	Locating Ring
		A	A1	A2	Da	H	H1	H2	J	L	Ca	N	N1	G			
MNL 519	85	145	100	163	131	212	112	35	290	345	68	28	22	20	13.9	1219 EK + H 219 2219 EK + H 319 22219 EK + H 319	18/170 12.5/170 12.5/170
MNL 616	70					210										1316 EK + H 316 2316 EK + H 2316 21316 CCK + H 316 22316 EK + H 2316	14.5/170 5/170 14.5/170 5/170
MNL 520	90	160	110	178	137.5	218	112	40	320	380	70	32	26	24	17.6	1220 EK + H 220 2220 EK + H 320 22220 EK + H 320 23220 CCK + H 2320	18/180 12/180 12/180 4.85/180
MNL 617	75					215										1317 EK + H 317 2317 EK + H 2317 21317 CCK + H 317 22317 EK + H 2317	14.5/180 5/180 14.5/180 5/180
MNL 522	100	175	120	191	147.5	242	125	45	350	410	80	32	26	24	22	1222 EK + H 222 2222 EK + H 322 22222 EK + H 322 23222 CCK + H 2322	21/200 13.5/200 13.5/200 5.1/200
MNL 619	85					239										1319 EK + H 319 2319 EK + H 2319 21319 CCK + H 319 22319 EK + H 2319	17.5/200 6.5/200 17.5/200 6.5/200
MNL 524	110	185	120	199	157.5	271	140	45	350	410	86	32	26	24	26.5	1224 EK + H 3024 22224 EK+ H 3124 23224 CCK + H 2324	22/215 14/215 5/215
MNL 620	90															1320 EK + H 320 2320 EK + H 2320 21320 CCK + H 320 22320 EK + H 2320	19.5/215 6.5/215 19.5/215 6.5/215
MNL 526	115	190	130	208	167.5	290	150	50	380	445	90	35	28	24	33	22226 EK + H 3126 23226 CCK + H 2326	13/230 5/230
MNL 528	125	205	150	223	177.5	302	150	50	420	500	98	42	35	30	40	22228 CCK + H 3128 23228 CCK + H 2328	15/250 5/250
MNL 530	135	220	160	241	192.5	323	160	60	450	530	106	42	35	30	49	22230 CCK + H 3130 23230 CCK + H 2330	16.5/270 5/270
MNL 532	140	235	160	254	202.5	344	170	60	470	550	114	42	35	30	55	22232 CCK + H 3132 23232 CCK + H 2332	17/290 5/290

Series MNL 200 / 300 Plummer Block Housing for Straight (Cylindrical) Bore Bearings

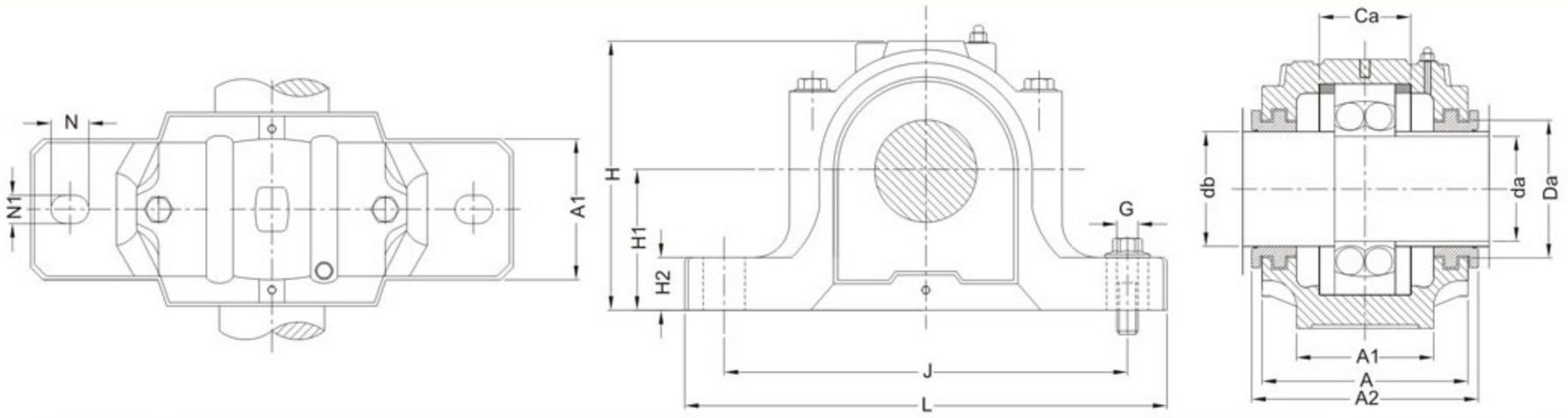

Plummer Block Designation	Shaft dia		DIMENSION IN MM													Approx Weight kg.	Suitable For Bearing	Locating Ring
	da	db	A	A1	A2	Da	H	H1	H2	J	L	Ca	N	N1	G			
MNL 205	25	30	67	46	80	36.5	74	40	19	130	165	25	20	15	12	1.5	1205 E 2205 E 22205 E	5/52 3.5/52 3.5/52
MNL 206	30	35	77	52	89	46.5	89	50	22	150	185	32	20	15	12	2.0	1206 E 2206 E 22206 E	8/62 6/62 6/62
MNL 305	25	30															1305 E 2305 E 21305 CC	7.5/62 4/62 7.5/62
MNL 207	35	45	82	52	94	56.5	93	50	22	150	185	34	20	15	12	2.2	1207 E 2207 E 22207 E	8.5/72 5.5/72 5.5/72
MNL 306	30	35															1306 E 2306 E 21306 CC	7.5/72 3.5/72 7.5/72
MNL 208	40	50	85	60	97	62	108	60	25	170	205	39	20	15	12	3.0	1208 E 2208 E 22208 E	10.5/80 8/80 8/80
MNL 307	35	45															1307 E 2307 E 21307 CC	9/80 4/80 9/80
MNL 209	45	55	85	60	97	67	109	60	25	170	205	30	20	15	12	3.0	1209 E 2209 E 22209 E	5.5/85 3.5/85 3.5/85
MNL 210	50	60	90	60	102	72	113	60	25	170	205	41	20	15	12	3.3	1210 E 2210 E 22210 E	10.5/90 9/90 9/90
MNL 308	40	50															1308 E 2308 E 21308CC 22308 E	9/90 4/90 9/90 4/90
MNL 211	55	65	95	70	107	77	128	70	28	210	255	44	24	18	16	4.5	1211 E 2211 E 22211 E	11.5/100 9.5/100 9.5/100
MNL 309	45	55															1309 E 2309 E 21309CC 22309 E	9.5/100 4/100 9.5/100 4/100

Masta®
PRECISION HOUSINGS

MNL 200 & 300 Series

Series MNL 200 / 300 Plummer Block Housing for Straight (Cylindrical) Bore Bearings

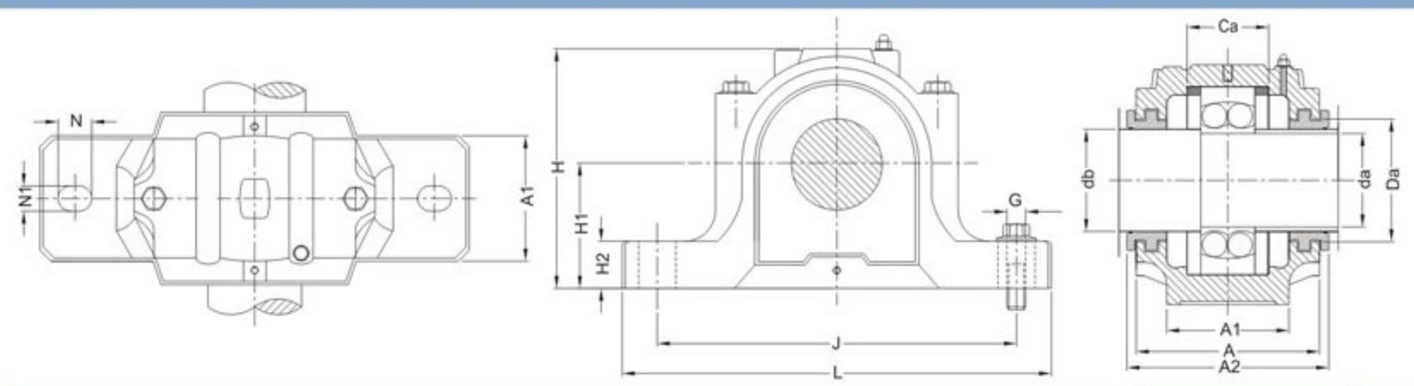

Plummer Block Designation	Shaft dia		DIMENSION IN MM													Approx Weight kg.	Suitable For Bearing	Locating Ring Size / Two
	da	db	A	A1	A2	Da	H	H1	H2	J	L	Ca	N	N1	G			
MNL 212	60	70	105	70	117	87	134	70	30	210	255	48	24	18	16	5.0	1212 E 2212 E 22212 E	13/110 10/110 10/110
MNL 310	50	60															1310 E 2310 E 21310CC 22310 E	10.5/110 4/110 10.5/110 4/110
MNL 213	65	75	110	80	122	92.5	149	80	30	230	275	51	24	18	16	6.5	1213 E 2213 E 22213 E	14/120 10/120 10/120
MNL 311	55	65															1311 E 2311 E 21311CC 22311 E	11/120 4/120 11/120 4/120
MNL 215	75	85	115	80	127	102.5	155	80	30	230	280	56	24	18	16	7.2	1215 E 2215 E 22215 E	15.5/130 12.5/130 12.5/130
MNL 312	60	70															1312 E 2312 E 21312CC 22312 E	12.5/130 5/130 12.5/130 5/130
MNL 216	80	90	120	90	138	108	177	95	32	260	315	58	28	22	20	9.5	1216 E 2216 E 22216 E	16/140 12.5/140 12.5/140
MNL 313	65	75															1313 E 2313 E 21313CC 22313 E	12.5/140 5/140 12.5/140 5/140
MNL 217	85	95	125	90	143	112	183	95	32	260	320	61	28	22	20	10	1217 E 2217 E 22217 E	16.5/150 12.5/150 12.5/150
MNL 314	70	80															1314 E 2314 E 21314CC 22314 E	13/150 5/150 13/150 5/150
MNL 218	90	100	140	100	158	120	194	100	35	290	345	65	28	22	20	12.7	1218 E 2218 E 22218 E 23218CC	17.5/160 12.5/160 12.5/160 6.25/160
MNL 315	75	85															1315 E 2315 E 21315CC 22315 E	14/160 5/160 14/160 5/160

MNL 200 & 300 Series

Masta® PRECISION HOUSINGS

Series MNL 200 / 300 Plummer Block Housing for Straight (Cylindrical) Bore Bearings

MNL 224/320 and above are supplied with an eye bolt on top Cap

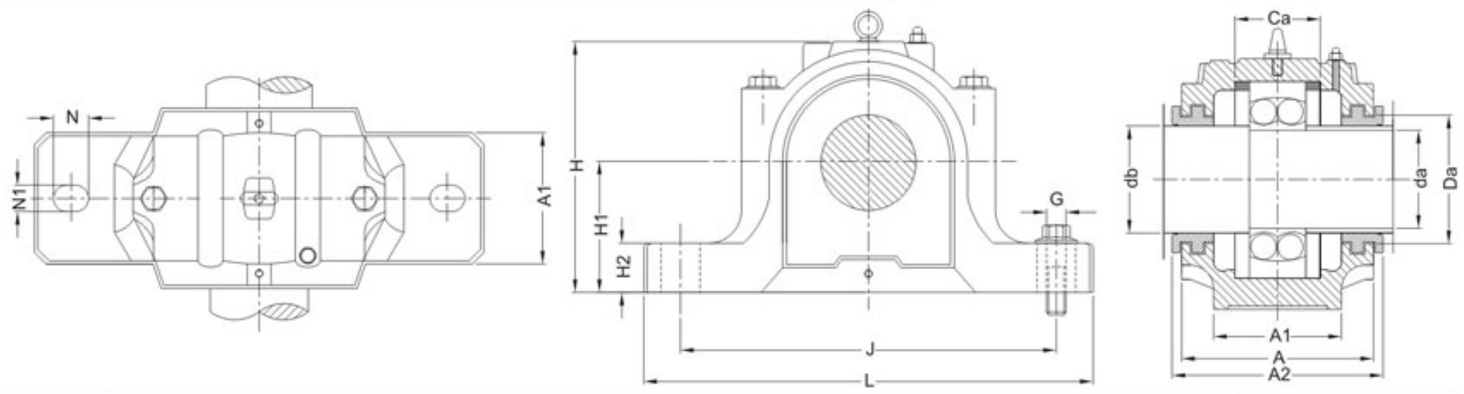

Plummer Block Designation	Shaft dia		DIMENSION IN MM													Approx Weight kg.	Suitable For Bearing	Locating Ring Size / Two
	da	db	A	A1	A2	Da	H	H1	H2	J	L	Ca	N	N1	G			
MNL 219	95	110	145	100	163	131	210	112	35	290	345	68	28	22	20	13.9	1219 E 2219 E 22219 E	18/170 12.5/170 12.5/170
MNL 316	80	90					212										1316 E 2316 E 21316CC 22316 E	14.5/170 5/170 14.5/170 5/170
MNL 220	100	115	160	110	178	137.5	218	112	40	320	380	70	32	26	24	17.6	1220 E 2220 E 22220 E 23220CC	18/180 12/180 12/180 4.85/180
MNL 317	85	95															1317 E 2317 E 21317CC 22317 E	14.5/180 5/180 14.5/180 5/180
MNL 222	110	125	175	120	191	147.5	242	125	45	350	410	80	32	26	24	22	1222 E 2222 E 22222 E 23222CC	21/200 13.5/200 13.5/200 5.1/200
MNL 319	95	110															1319 E 2319 E 21319CC 22319 E	17.5/200 6.5/200 17.5/200 6.5/200
MNL 224	120	135	185	120	199	157.5	271	140	45	350	410	86	32	26	24	26.5	1224 E 22224 E 23224CC	22/215 14/215 5/215
MNL 320	100	115															1320 E 2320 E 21320CC 22320 E	19.5/215 6.5/215 19.5/215 6.5/215
MNL 226	130	145	190	130	208	167.5	290	150	50	380	445	90	35	28	24	33	1226 E 22226 E 23226CC	22/230 13/230 5/230
MNL 228	140	155	205	150	223	177.5	302	150	50	420	500	98	42	35	30	40	22228CC 23228CC	15/250 5/250
MNL 230	150	165	220	160	241	192.5	323	160	60	450	530	106	42	35	30	49	22230CC 23230CC	16.5/270 5/270
MNL 232	160	175	235	160	254	202.5	344	170	60	470	550	114	42	35	30	55	22232CC 23232CC	17/290 5/290

Masta®
PRECISION HOUSINGS

Illustration for Large Size MNL 3000/3100 Series
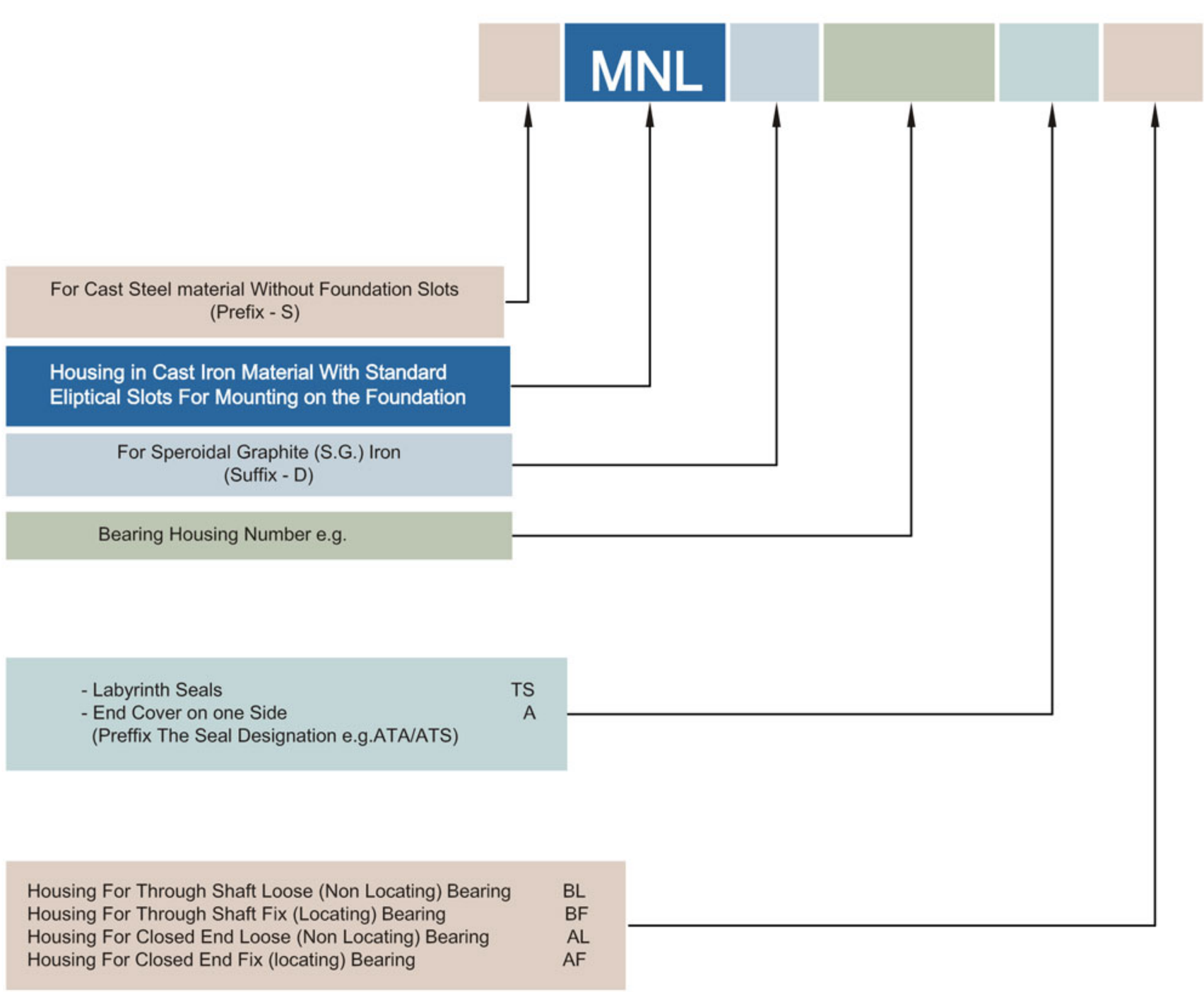
MNL Plummer block housings are suitable for self aligning, spherical roller bearings and CARB bearings for shaft dia 150 to 340 mm. These housings are split type with 4 elliptical holes in housing base and suitable for grease or oil lubrication. For Grease lubrication variety of seals such as felt seals (TC Type), Labyrinth Seals (TS Type), Double Lip Seals (TG type) or Taconite Seals (ND Type) can be used. For oil lubrication special type of seal (TURU type) can be used. Principal dimensions are identical to SNA/SNH type housings and are interchangeable. MNL housing are available with 4 elliptical slots in the base designated as FMNL or 2 drilled holes in the base with suffix MS1 or 4 drilled holes in the base with suffix MS2. These housings can be used for located bearing by inserting Locating rings on either side of bearing.